Sasi Institute Of Technology & Engineering
Kadakatla,
Near the aerodrome in Tadepalligudem,
West Godavari district,
AndhraPradesh-534101

Department of Electrical & Electronics Engineering

CENTRE OF EXCELLENCE IN MARITIME & SHIPBUILDING
COMPETENCIES, EMPLOYABILITY, METHODOLOGY & SKILLS
CREATING COMPETENCIES FOR INDUSTRY 4.0

project description	Design and Documentation of an VFD Motor Control Panel Using EPLAN Electric P8
Job Number	IEC_bas001
Commission	Eplan

Manufacturer(company)

Path	Eplan sample project
Project name	VFD MOTOR CONTROL
Make	
Type	
Place of installation	
Responsible for project	
Part feature	

Project Done By :

K.Divya (22K61A0247)
G.Sowmya (22K61A0240)
CH.Suvarna (22K61A0222)
B.N.H.Vasavi (22K61A0218)

Created on	01-12-2025		
Edit date	15-12-2025	by (short name) EEE-ESLAB-04	9

Table of contents

F06_002

Function designation	Location designation	Page	Page description	supplementary page field	Date	Edited by
		1	Connection list : -		12-12-2025	EEE-ESLAB-04
		2	Device tag list : =CA1+EAA-F1 - =CA1+EAA-S2		12-12-2025	EEE-ESLAB-04
		3	Manufacturer / supplier list : SIE : SIE		12-12-2025	EEE-ESLAB-04
		4	Summarized parts list : SIE.3NE1814-0 - SIE.3TF3110-0AR0		12-12-2025	EEE-ESLAB-04
		5	Table of contents : /1 - =CA1+EAA/3		12-12-2025	EEE-ESLAB-04
		8	Parts list : SIE.3NE1814-0 -		12-12-2025	EEE-ESLAB-04
CA1	EAA	1	Title page		12-12-2025	EEE-ESLAB-04
	EAA	2	PP2		12-12-2025	EEE-ESLAB-04
	EAA	3	PP2		12-12-2025	EEE-ESLAB-04

Parts list

F01_002

Device tag Placement	Quantity QU	Designation	Type number Order number	Manufacturer Supplier	Part number Function text	Pos.
=CA1+EAA-F1 =CA1+EAA/2.E:2	1	SITOR FUSE-LINK UTILIZ. CATEGORY GS, DIN 43620 20A , AC 690 V ,(SIZE 000)	3NE1814-0 3NE1814-0	SIE SIE	SIE.3NE1814-0	
=CA1+EAA-F2 =CA1+EAA/2.F:2	1	SITOR FUSE-LINK UTILIZ. CATEGORY GS, DIN 43620 20A , AC 690 V ,(SIZE 000)	3NE1814-0 3NE1814-0	SIE SIE	SIE.3NE1814-0 FUSES	
=CA1+EAA-F3 =CA1+EAA/2.F:2	1	SITOR FUSE-LINK UTILIZ. CATEGORY GS, DIN 43620 20A , AC 690 V ,(SIZE 000)	3NE1814-0 3NE1814-0	SIE SIE	SIE.3NE1814-0 =	
=CA1+EAA-F4 =CA1+EAA/2.E:3	1 Piece	SENTRON Miniature circuit breaker	5SL4306-6 5SL4306-6	SIE	SIE.5SL4306-6	
=CA1+EAA-F6 =CA1+EAA/3.E:3	1 Piece	Miniature circuit breaker - xC60 1POLE	A9N1P06C A9N1P06C	SE SE	SE.A9N1P06C	
=CA1+EAA-L1 =CA1+EAA/2.D:4	0				BUSBAR	
=CA1+EAA-L2 =CA1+EAA/2.E:4	0					
=CA1+EAA-L3 =CA1+EAA/2.E:4	0					
=CA1+EAA-M1 =CA1+EAA/2.D:9	1 Piece	Multi-Speed Motor 750/1000 rpm synchronous speed,Mounting Type:Foot Flange mig	YD3-160L-8/6-6-8-B35 YD3-160L-8/6-6-8-B35	JHD	JHD.YD3-160L-8/6-6-8-B35	
=CA1+EAA-P1 =CA1+EAA/3.G:5	0					
=CA1+EAA-Q =CA1+EAA/2.E:5	1				SIE.6SL3224-0BE25-5UA0	
=CA1+EAA-Q4 =CA1+EAA/2.F:4	0				POWER NO CONTACTS	
=CA1+EAA-Q5 =CA1+EAA/3.E:6	1 Piece	CONTACTOR,12A AC3,415V	3TF3110-0AR0 3TF3110-0AR0	SIE SIE	SIE.3TF3110-0AR0	
=CA1+EAA-S1 =CA1+EAA/3.E:4	0					
=CA1+EAA-S2 =CA1+EAA/3.E:5	0					

Device tag list

F03_001

Device tag Part number Type number	Function text Article designation	X-Ref	Symbol
=CA1+EAA-F1 SIE.3NE1814-0 3NE1814-0	SITOR FUSE-LINK UTILIZ. CATEGORY GS, DIN 43620	=CA1+EAA/2.E:2	
=CA1+EAA-F2 SIE.3NE1814-0 3NE1814-0	FUSES SITOR FUSE-LINK UTILIZ. CATEGORY GS, DIN 43620	=CA1+EAA/2.F:2	
=CA1+EAA-F3 SIE.3NE1814-0 3NE1814-0	= SITOR FUSE-LINK UTILIZ. CATEGORY GS, DIN 43620	=CA1+EAA/2.F:2	
=CA1+EAA-F4 SIE.5SL4306-6 5SL4306-6	SENTRON Miniature circuit breaker	=CA1+EAA/2.E:3	
=CA1+EAA-F6 SE.A9N1P06C A9N1P06C	Miniature circuit breaker - xC60 1POLE	=CA1+EAA/3.E:3	
=CA1+EAA-L1	BUSBAR	=CA1+EAA/2.D:4	
=CA1+EAA-L2		=CA1+EAA/2.E:4	
=CA1+EAA-L3		=CA1+EAA/2.E:4	
=CA1+EAA-M1 JHD.YD3-160L-8/6-6-8-B35 YD3-160L-8/6-6-8-B35	Multi-Speed Motor	=CA1+EAA/2.D:9	

Device tag Part number Type number	Function text Article designation	X-Ref	Symbol
=CA1+EAA-P1		=CA1+EAA/3.G:5	
=CA1+EAA-Q SIE.6SL3224-0BE25-5UA0		=CA1+EAA/2.E:5	
=CA1+EAA-Q4	POWER NO CONTACTS	=CA1+EAA/2.F:4	
=CA1+EAA-Q5 SIE.3TF3110-0AR0 3TF3110-0AR0	CONTACTOR,12A AC3,415V	=CA1+EAA/3.E:6	
=CA1+EAA-S1		=CA1+EAA/3.E:4	
=CA1+EAA-S2		=CA1+EAA/3.E:5	

Date:		Project Done By:	Project Name	Project Description	Project Guide	
15-12-2025	SASI AUTONOMOUS Department of Electrical & Electronics Engineering	K.Divya CH.Suvarna G.Sowmya B.Vasavi	VFD MOTOR CONTROL	Design and Documentation of an VFD Motor Control Panel Using EPLAN Electric P8	Mr.A.S.N.R.Gopal	CENTRE OF EXCELLENCE IN MARITIME & SHIPBUILDING

Summarized parts list

F02_002

Order number	Quantity	Designation	Type number	Supplier	Unit price	Total price
3NE1814-0	3	SITOR FUSE-LINK UTILIZ. CATEGORY GS, DIN 43620	3NE1814-0	SIE	0.00	0.00
5SL4306-6	1	SENTRON Miniature circuit breaker	5SL4306-6		0.00	0.00
A9N1P06C	1	Miniature circuit breaker - xC60 1POLE	A9N1P06C	SE	0.00	0.00
	0					0.00
YD3-160L-8/6-6-8-B35	1	Multi-Speed Motor	YD3-160L-8/6-6-8-B35		0.00	0.00
	1					0.00
3TF3110-0AR0	1	CONTACTOR,12A AC3,415V	3TF3110-0AR0	SIE	0.00	0.00

Connection list

F27_002

Connection	Target 1	Target 2	Color	Cross-section
	=CA1+EAA-M1:U1	=CA1+EAA-Q5:2	RD	2,5
	=CA1+EAA-M1:V1	=CA1+EAA-Q5:4	YE	2,5
	=CA1+EAA-M1:W1	=CA1+EAA-Q5:6	BU	2,5
	=CA1+EAA-Q:XLOAD:U2	=CA1+EAA-Q5:1	RD	2,5
	=CA1+EAA-Q:XLINE:L1	=CA1+EAA-Q4:2/T1	RD	2,5
	=CA1+EAA-F4:2	=CA1+EAA-Q4:1/L1	RD	2,5
	=CA1+EAA-F1:2	=CA1+EAA-F4:1	RD	2,5
	=CA1+EAA-F1:1	=CA1+EAA-L1:1	RD	2,5
	=CA1+EAA-Q:XLOAD:V2	=CA1+EAA-Q5:3	YE	2,5
	=CA1+EAA-Q:XLINE:L2	=CA1+EAA-Q4:4/T2	YE	2,5
	=CA1+EAA-F4:4	=CA1+EAA-Q4:3/L2	YE	2,5
	=CA1+EAA-F2:2	=CA1+EAA-F4:3	YE	2,5
Y	=CA1+EAA-F2:1	=CA1+EAA-L2:2	YE	2,5
	=CA1+EAA-Q:XLOAD:W2	=CA1+EAA-Q5:5	BU	2,5
	=CA1+EAA-Q:XLINE:L3	=CA1+EAA-Q4:6/T3	BU	
	=CA1+EAA-F4:6	=CA1+EAA-Q4:5/L3	BU	
	=CA1+EAA-F3:2	=CA1+EAA-F4:5	BU	
B	=CA1+EAA-F3:1	=CA1+EAA-L3:3	BU	2,5
	=CA1+EAA-Q:XLOAD:DCN	=CA1+EAA-Q5:A2	BK	2,5
	=CA1+EAA-P1:x2	=CA1+EAA-Q5:A2	BK	2,5
	=CA1+EAA-Q5:A1	=CA1+EAA-S2:14		
	=CA1+EAA-Q5:14	=CA1+EAA-Q5:A1		
	=CA1+EAA-S1:12	=CA1+EAA-S2:13		
	=CA1+EAA-Q5:13	=CA1+EAA-S2:13		
	=CA1+EAA-F2:12	=CA1+EAA-S1:11		
	=CA1+EAA-F2:11	=CA1+EAA-F6:2		
	=CA1+EAA-F2:11	=CA1+EAA-F2:13		
	=CA1+EAA-F6:1	=CA1+EAA-Q:XLOAD:DCP R1		
	=CA1+EAA-F2:14	=CA1+EAA-P1:x1		

Manufacturer / supplier list

F31_002

Company	short name	Street	ZIP code	City	E-mail
Siemens	SIE	WITTELSBACHERPLATZ 2	80333	MUENCHEN	contact@siemens.com

POWER CIRCUIT FOR VFD

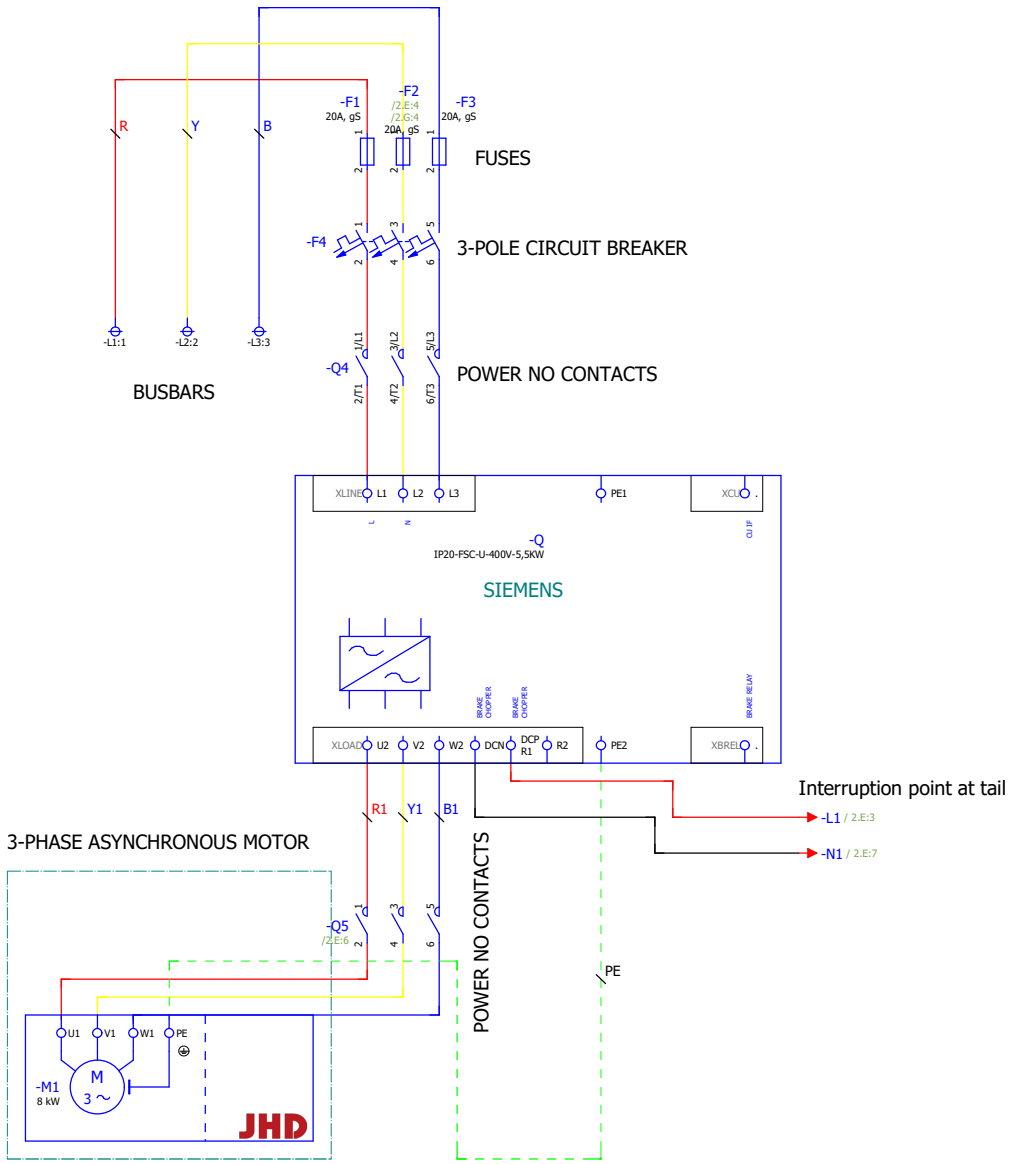

Date:		Project Done By:	Project Name	Project Description	Project Guide		
15-12-2025	SASI AUTONOMOUS Department of Electrical & Electronics Engineering	K.Divya CH.Suvarna G.Sowmya B.Vasavi	VFD MOTOR CONTROL	Design and Documentation of an VFD Motor Control Panel Using EPLAN Electric P8	Mr.A.S.N.R.Gopal	CENTRE OF EXCELLENCE IN MARITIME & SHIPBUILDING	=CA1 + EAA Page 1 / 9

CONTROL CIRCUIT FOR VFD

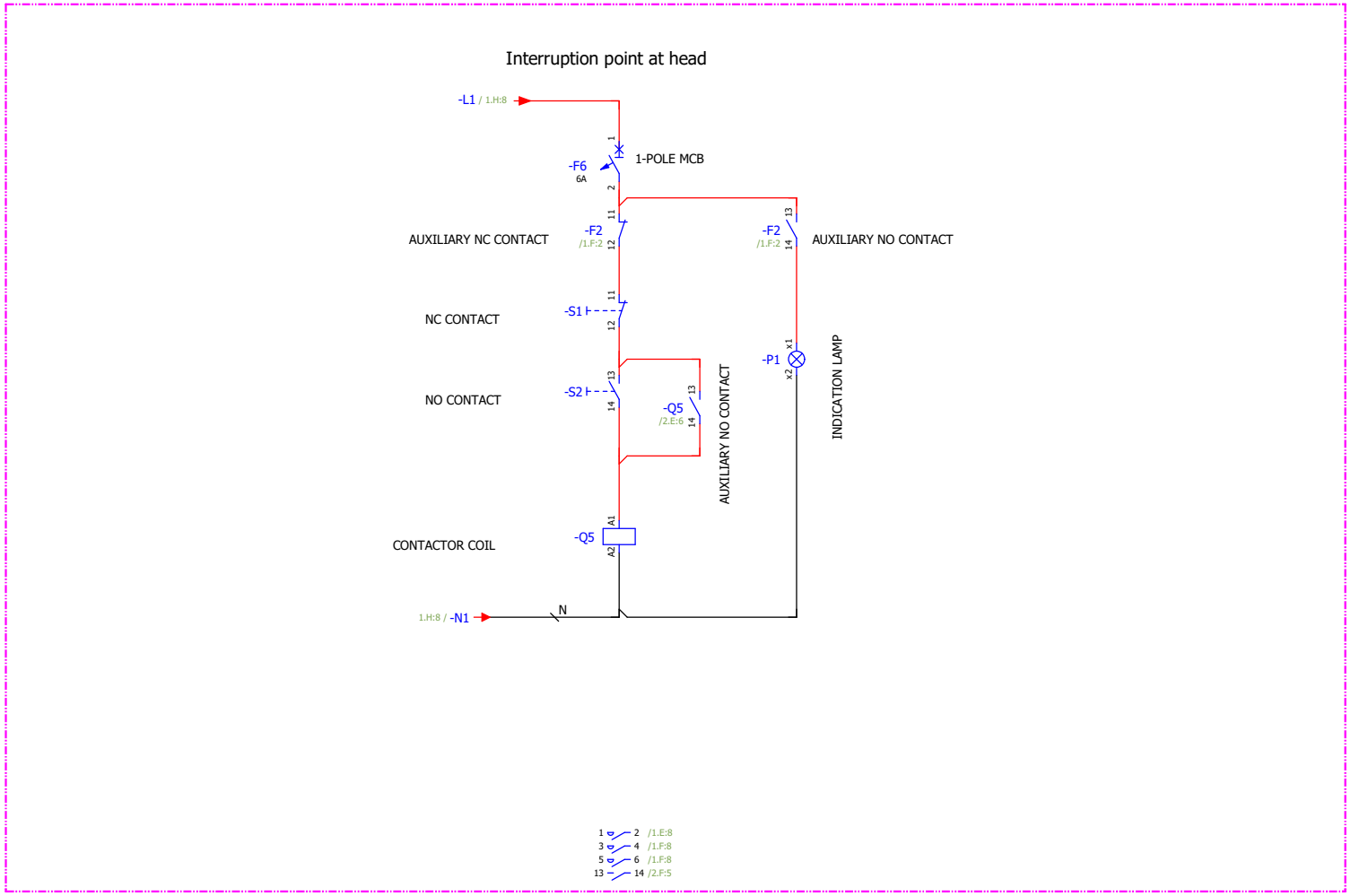

Date:		Project Done By:	Project Name	Project Description	Project Guide		
15-12-2025	SASI AUTONOMOUS Department of Electrical & Electronics Engineering	K.Divya CH.Suvarna G.Sowmya B.Vasavi	VFD MOTOR CONTROL	Design and Documentation of an VFD Motor Control Panel Using EPLAN Electric P8	Mr.A.S.N.R.Gopal	CENTRE OF EXCELLENCE IN MARITIME & SHIPBUILDING	=CA1 + EAA Page 2 / 9